意美特®

集成智能 无人高效

INTEGRATED AND INTELLIGENT, UNMANNED AND EFFECTIVE

26年专注牧场装备

FOCUS ON INTELLIGENT EQUIPMENT FOR 26 YEARS

让装备发挥更大价值

LET THE EQUIPMENT PLAY A GREATER VALUE

意美特智能装备(山东)集团有限公司
400-091-5999
http://www.chinayimeite.com

泰安意美特机械有限公司
山东省新泰市谷里工业园
400-6587-226
http://www.sdtxjx.com

意美特国际贸易部
山东省泰安市万达广场2号楼1407
+86-538-8258699
http://www.imetec.cc

泰安意美特机械有限公司辽中分公司
辽宁省沈阳市辽中区
400-9951-589
http://www.imetec.cc

宁夏意美特鼎峰智能装备有限公司
吴忠市利通区
400-053-8969
http://www ymtdf com

黑龙江意美特华泰畜牧机械有限公司
黑龙江省大庆市杜尔伯特
19806288111
http://www.ymtht.com

400-091-5999

意美特®

伸缩臂叉装车

YMT TELEHANDLER

YMT1840 | YMT1440

YMT1840

起升高度：17.6M
Lifting height
载重量：4000KG
Loading capacity

YMT1440

起升高度：13.5M
Lifting height
载重量：4000KG
Loading capacity

标准尖端技术

Standard cutting-edge technology

WSC1840标配自动调平功能，可实时监控并自动调整设备姿态，保证负载在变幅过程中始终保持水平，有效防止物料洒漏和安全事故的发生。
WSC1840 comes standard with an automatic leveling function, which monitors and automatically adjusts the posture of the equipment in real time to ensure that the load always remains horizontal during the luffing process, effectively preventing material spillage and safety accidents.

前轴双轮转向

Two-wheel steering on the front axle

专为高速公路和日常驾驶而设计，确保稳定的直线行驶和高效的通过性。
Specially designed for high speed road and daily driving,ensuring stable straight line driving andefficient passability.

独特的蟹型转向模式

Unique crab walking mode

实现精准的左右定位，即使靠近墙壁或障碍物也能保证稳定控制，确保作业精度和效率。
Achieve precise left and right positioning, and ensure stable control even when close to walls or obstacles, ensuring operating accuracy and efficiency.

前轴和后轴均采用四轮转向

Four-wheel steering on the front and rear axles

在狭小空间中展现非凡实力，大幅缩小转弯半径，灵活避障，确保作业安全无忧。
It shows extraordinary strengthin a smal space. By greatly reducing the turning radius it can flexibly avoid obstacles and ensure safe and worry free operations.

加固驾驶室

Reinforced Cab

经过 ROPS 和 FOPS 认证，具有安全结构顶板和可选前格栅，可提供 360°保护。
ROPS & FOPS certified, with thick structure topplate,& optional front grille for 360° protection.

项目 MODEL	YMT1440

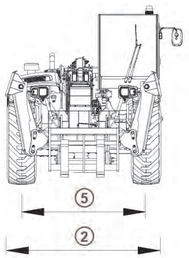

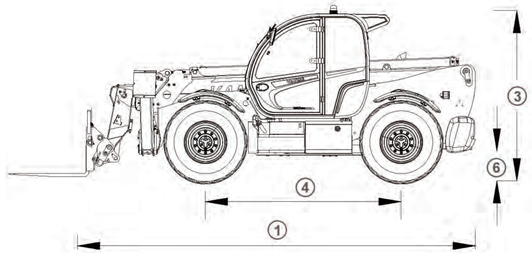

机器型号 Model Machine	YMT1440
①	6320mm
②	2420mm
③	2812mm
④	3070mm
⑤	1960mm
⑥	430mm
⑦	4200mm

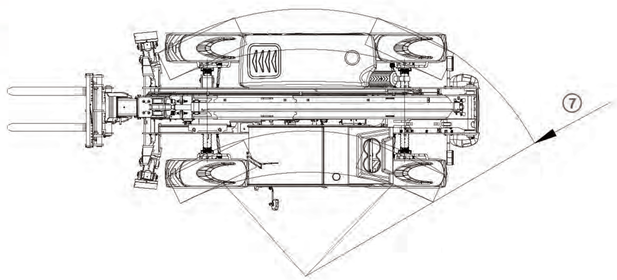

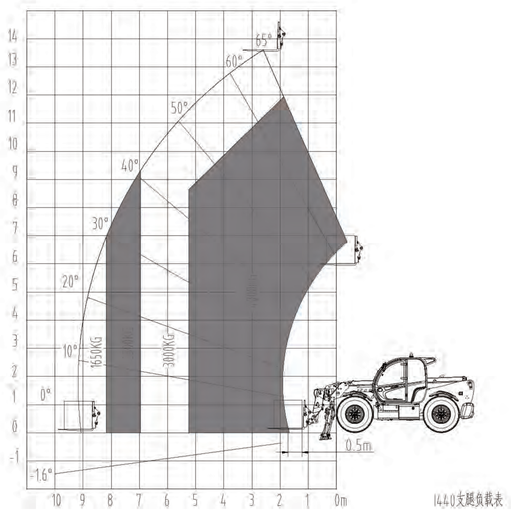

YMT1440 Support arm load table 支撑臂载荷台

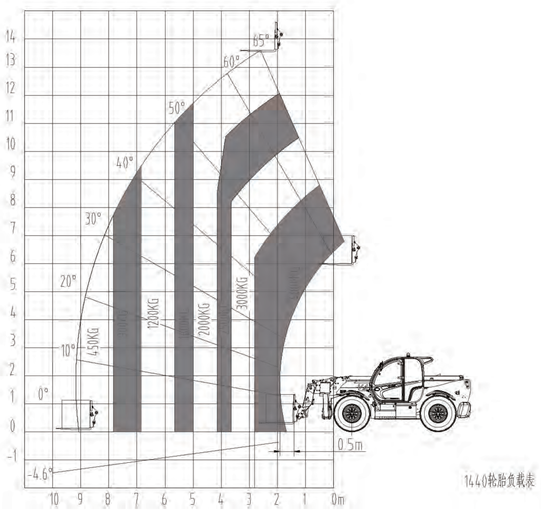

YMT1440 Tire Load Table 轮胎载荷表

项目 MODEL		YMT1440	YMT740
承载能力	**Capability**		
载重	Max Capacity	4000kg	4000kg
最大举升高度	Max Lifting Height	13.5 m	7m
最大水平前伸距	Max Outreach	9.5 m	3.6 m
铲斗崛起力	Breakout Force with Bucket	7500 daN	6800 daN
最大高度举升能力	Lift Capacity at Maximum height	3000 kg	3300kg
最大水平前伸举升能力	Lift Capacity at Maximum reach	1650 kg	1300kg
尺寸	**Dimension**		
长度	Overall Length to Carriage	6.16 m	5.1m
总宽	Overall Width	2.42 m	2.33 m
总高	Overall Height	2.7 m	2.5 m
轴距	Wheelbase	3.07 m	2.9 m
轮距	Front Track	1.96 m	1.93 m
底座离地间隙	Ground Clearance	0.41 m	0.38 m
车架左右倾角	Tilt Angle	±9°	
转弯半径	External Turning Radius	4.2 m	4m
轮胎型号	Tires Type	440/80R24	400/70R24
驾驶室宽度	Overall Cab Width	0.98 m	0.98m
性能	**Performance**		
臂起升	Lifting	11s - 17.5s	7s - 15.3s
臂下降	Lowering	16s - 23.5s	6.2s - 14s
臂伸出	Extension	15s - 22.5s	4.5s - 14s
臂收回	Retraction	11s - 18s	4.5s - 13s
上倾翻	Crowd	5.2 - 24.3s	2.9s - 6.5s
下倾翻	Dump	5s - 24.8s	2.3s - 5s
发动机	**Engine**		
品牌	Engine Brand	Cummins	Cummins
型号	Engine Model	QSB3.9-C110	B3.9CS4
排量	Capacity of Cylinders	3.9 L	3.9 L
冷却方式	Cooling Method	水冷Water Cooling	水冷 Water Cooling
最大功率	Max Power	81kw/2400r	81kw/2200r
最大力矩	Max Torque	480 Nm	480 Nm
牵引力	Traction Force	70.5 KN	71 KN
传动系统	**Transmission**		
行驶速度	Travel Speed	0 - 30	0 - 30
爬坡能力	Gradeability	30°	32°
驱动型式	Steering Model	4WD/4WS	4WD/4WS
档位数(前进/后退)	Number of Gears (forward/reverse)	2 / 2	2 / 2
驻车制动	Parking Brake	自动停车Automatic parking	自动停车 Automatic parking
行车制动	Service Brake	湿式制动 Wet Brake	湿式制动Wet Brake
液压系统	**Hydraulics**		
泵	Hydraulic Pump Type	变量柱塞泵 Load Sensing Variable System	变量柱塞泵Load Sensing Variable System
压力	Hydraulic Low Pressure	275 bar	275 bar
油箱容量	**Tank capacities**		
柴油	Fuel Tank	140 L	95 L
液压油	Hydraulic Oil	180 L	210 L
货叉	**Fork**		
货叉规格	Forks Length/ Width/ Section	1200x150x50 mm	1200x150x50 mm
货叉向上倾角/上倾翻角度	Tilt-Up Angle	16°	13°
货叉向下倾角/下倾翻角度	Tilt-Down Angle	117°	101°
重量	**Weight**		
整机重量(带叉)	Machine Weight (with forks)	10800kg	7800kg

项目 MODEL	YMT1840

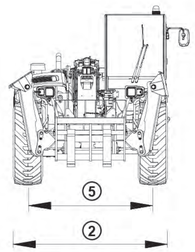

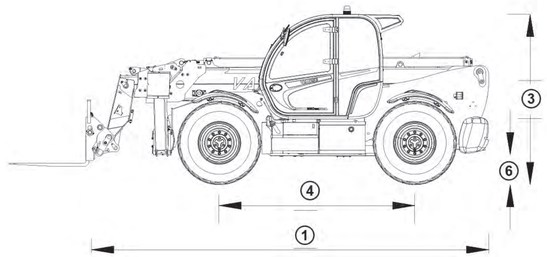

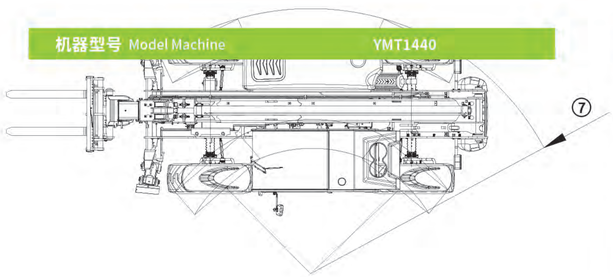

机器型号 Model Machine	YMT1440
①	6320 mm
②	2420 mm
③	2812 mm
④	3070 mm
⑤	1960 mm
⑥	430 mm
⑦	4200 mm

机器型号 Model Machine	YMT1840
①	6320 mm
②	2420 mm
③	2812 mm
④	3070 mm
⑤	1960 mm
⑥	430 mm
⑦	4200 mm

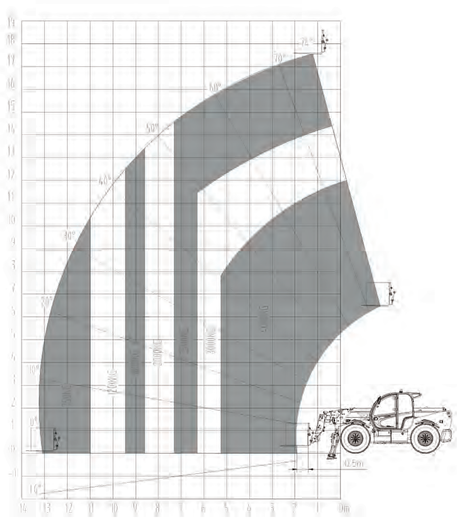

YMT1840 Support arm load table 支撑臂载荷台

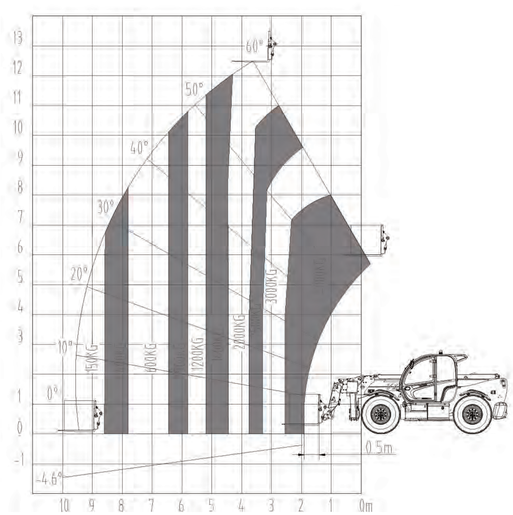

YMT1840 Tire Load Table 轮胎载荷表

项目 MODEL		YMT1840
承载能力	**Capability**	
载重	Max Capacity	4000kg
最大举升高度	Max Lifting Height	17.6 m
最大水平前伸距	Max Outreach	13.1 m
铲斗崛起力	Breakout Force with Bucket	7500 daN
最大高度举升能力	Lift Capacity at Maximum height	2500 kg
最大水平前伸举升能力	Lift Capacity at Maximum reach	700 kg
尺寸	**Dimension**	
长度	Overall Length to Carriage	6.16 m
总宽	Overall Width	2.42 m
总高	Overall Height	2.7 m
轴距	Wheelbase	3.07 m
轮距	Front Track	1.96 m
底座离地间隙	Ground Clearance	0.41 m
车架左右倾角	Tilt Angle	±9°
转弯半径	External Turning Radius	4.2 m
轮胎型号	Tires Type	440/80R24
驾驶室宽度	Overall Cab Width	0.98 m
性能	**Performance**	
臂起升	Lifting	7.5s - 17.5s
臂下降	Lowering	13.5s - 23.5s
臂伸出	Extension	12.5s - 22.5s
臂收回	Retraction	8s - 18s
上倾翻	Crowd	5.5s - 24.8s
下倾翻	Dump	7.3s - 17.2s
发动机	**Engine**	
品牌	Engine Brand	Cummins
型号	Engine Model	QSB3.9 - C110
排量	Capacity of Cylinders	3.9 L
冷却方式	Cooling Method	水冷 Water Cooling
最大功率	Max Power	81kw/2200r
最大力矩	Max Torque	480 Nm
牵引力	Traction Force	70.5 KN
传动系统	**Transmission**	
行驶速度	Travel Speed	0 - 30
爬坡能力	Gradeability	30°
驱动型式	Steering Model	4WD/4WS
档位数(前进/后退)	Number of Gears (forward/reverse)	2 / 2
驻车制动	Parking Brake	自动停车Automatic parking
行车制动	Service Brake	湿式制动 Wet Brake
液压系统	**Hydraulics**	
泵	Hydraulic Pump Type	变量柱塞泵 Load Sensing Variable System
压力	Hydraulic Low Pressure	275 bar
油箱容量	**Tank capacities**	
柴油	Fuel Tank	140 L
液压油	Hydraulic Oil	180 L
货叉	**Fork**	
货叉规格	Forks Length/ Width/ Section	1200x150x50 mm
货叉向上倾角/上倾翻角度	Tilt-Up Angle	16°
货叉向下倾角/下倾翻角度	Tilt-Down Angle	117°
重量	**Weight**	
整机重量(带叉)	Machine Weight (with forks)	12500kg

属具
ATTACHMENTS

YMT伸缩臂叉车可以提供多种属具，以满足各种工作要求和应用场景。

The YMT telehandler offers a wide range of attachments to cater to various work requirements and application scenarios.

货叉

液压悬浮式调距货叉

360° 旋转货叉

浮动货叉

倾翻货叉

铲斗

通用铲斗

多功能农用抓斗

建筑铲斗

取料斗

钳夹

圆包夹

高强度草料夹

混合草料夹

盆&桶夹

叉具&抓具

大容量粪抓

带抓齿粪叉

鲨鱼齿抓斗

四针草料叉

吊具

单吊钩

双吊钩

三吊钩

加长吊臂

工作平台

快开式平台

简易平台

带卷扬工作平台

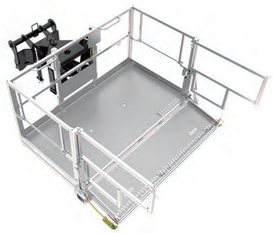
固定式屋顶平台

其它

封闭式清扫器

重载型液压卷扬机

轮胎机械手

混凝土吊斗

意美特®

电动铲车

ELECTRIC LOADER

YMT818

项目 MODEL		YMT818
整车尺寸	Vehicle size	2750-1330-1700
举/卸载高度	Lifting/unloading height	2.75/1.85m
整机质量	Machine weight	1.3tons
额定载重	Rated load	600kg
铲斗尺寸	Bucket size	1.3m
铲斗容量	Bucket Capacity	$0.3m^3$
配重容量	Weight capacity	$0.13m^3$
配重材质	Weight Material	铁砂 Iron sand
驱动电机	Drive motor	5000W (静音)(silent)
驱动方式	Drive mode	传动轴 Transmission shaft
变速箱形式	Gearbox type	全时四驱 Full-time four-wheel drive
挂挡方式	Gear shifting method	奔驰怀挡 Mercedes Benz hand gear
挡位	Gear	双高低速带跑路挡 Dual high and low speed with running gear
油泵电机	Oil pump motor	1800W无刷 brushless

项目 MODEL		YMT818
车桥	Axles	全悬浮工程车桥 Fully suspended engineering axle
刹车	brake	油刹 Oil brake
轮胎	Tire	26*12-12(宽度330) (width 330)
轴距	Trackbase	1260MM
轮距	Wheelbase	1100MM
最小离地间隙	Minimum ground clearance	200MM
最小转向角度	Minimum steering angle	115°
最小转弯半径	Minimum turning radius	2400MM
最高车速	Maximum speed	30
铲斗提升时间	Bucket lifting time	7.5S
电瓶	Battery	62斤*5块超威水电瓶 62 catties*5 pieces of super power water battery
续航时长	Battery life	4.5 hours
充电时长	Charging time	6.5-8小时(自动断电) 6.5-8 hours (automatic power off)

意美特®

滑移装载机

SKID STEER LOADERS

YMT120 | YMT-T23

- 采用负载敏感阀后补偿技术，动态调节流量，根据负载保证合理的流量，使运行速度提高15%，缩短运行周期，提高整体效率。
  The load-sensitive post-valve compensation technology dynamically adjusts flow, ensuring ample supply based on load. This boosts operating speed by 15%,slashing cycles and enhancing overall efficiency.

- 全景驾驶室标配FOPS、ROPS装置，安全性更高、可靠性更高。
  The panoramic cab is configured with FOPS and ROPS devices as standard to ensure higher safety and reliability.

- 飞船式座舱采用智能化高级屏幕电子实时监控系统，将设计与性能完美结合，智能化和舒适度大幅提升。
  The spaceship-style cockpit features the electronic real-time monitoring system with intelligent advanced screen, which combines thedesign and performance perfectly, and improves the level of intelligence and comfort significantly.

- 一键切换高流量模式，轻松连接刨床、圆盘锯等重型工具，满足更广泛应用的需求。
  Switchover to high-flow mode with one button, enabling easy coupling of heavy-duty tools such as planer and disc saw to meet the needs for a wider range of applications.

YMT-T23

- 宽敞的内部驾驶室设计可帮助操作员全天舒适高效地工作。悬浮座椅提供了更舒适、更不易疲劳的环境。增压驾驶室提供了更清洁、更安静的工作环境。
  The spacious interior cab designed helps the operator comfortably and productively all the day. The suspension seat provides further comfortable and less fatigue environment. The pressurized cab provides cleaner and quieter working environment.
- 空调是 TV70 的标准配置，驾驶室采用优化的管道和通风口设计，以最大限度地提高气流。AD 过滤器易于更换。
  Air conditioning is standard equipment on the TV100, the cab is designed with optimized ducts and vents to maximize airflow. Air filter easily replaced.
- ROPS(防滚翻保护系统)和FOPS(防落物保护结构)是保护操作员的标准设备。ROPS和FOPS 驾驶室经过认证，符合 IS0 标准。
  ROPS (Roll-over Protective System) and FOPS (Falling Object Protective Structure) are standard equipment to protect operator. The ROPS and FOPS cab is certified, satisfy with ISO standard.
- 驾驶室前门是第一个联锁装置。除非关闭，否则可防止吊臂提升。扶手是第二个联锁装置，放下后可启动发动机，有助于避免危险。
  The front door of the cab is the first interlock, which prevents the boom from lifting unless it is closed. The armrest is the second interlock: starting the engine after it is down helps keep harm's way at bay.
- 后门和空调冷却器芯可轻松摆动，液压驱动冷却系统，散热器固定在顶部，提供出色的可维护性。日常维护可在地面进行，右侧的发动机燃油和空气过滤器更易于更换。左侧的发动机机油滤清器和油水分离器易于维护。
  Rear door and AC cooler core swing out easily.Hydraulic drive cooling system, radiator fixed on the top provides excellent serviceability.Ground-level access to daily service: the engine fuel and air filters on the right side are easier to change. The engine oil filter and fuel-water separator on the left side are readily accessible.
- 驾驶室可向上摆动80度以上，方便接近机器系统并轻松更换液压关键部件和过滤器。
  The cab swings up more than 80 degrees, designed to access the machine systems and facilitate easy replacement of the hydraulic key components and filters.
- 我们的快速接头设计为广泛使用的 IS0 标准，标准快速接头允许一台机器使用一系列附件，为您的业务提供更大的多功能性。小型履带式装载机可与铲斗、扫帚、液压锤、螺旋钻、叉子、推土机铲刀和其他附件兼容。
  Our quick coupler is designed as ISO Standard which is widely used. The standard quick coupler allows one machine to use a series of attachments, giving your business greater versatility. Compact track loaders are compatible with buckets, brooms, hydraulic hammers, augers, forks, dozer blades and other attachments.

技术规格 SPECIFICATIONS

项目 MODEL		YMT-T23	
发动机功率范围	Engine Power(hp)	23	工作性能 Performance
行驶速度-标准	Speed-standard(km/h)	6	
履带型号	——	180*72	
额定载荷	Rated loading capacity(kg)	380	
举升形式	Lifting type	径向举升Radial lift	
工作三项合	Total cycle time(S)	9.2	
铲斗容积	Bucket capacity(m^3)	0.17	
系统安全压力	System pressure(bar)	170	发动机 Engine
液压系统额定流量	Hydraulic pump output flow(L/min)	38	
启动电瓶	——	12V	
液压油箱容积	Fuel tank(L)	30	
燃油箱容积	Fucl tank(L)	20	
不带铲斗时重量	wight with bucket(kg)	780	尺寸 Dimension
A.最大操作高度	Overall operating height (mm)	2510	
A-1.伸出最大操作高度	(mm)	2900	
B.至铲斗销高度(mm)	Hoight to buckot hinge pin(mm)	1940	
B-1.伸出时至铲斗销高度	(mm)	2350	
C.至操作杆顶高度	Height to top of cab(mm)	1400	
D.铲斗至其底部的最大高度	Height to bottom of level bucket(mm)	1800	
E.不带铲斗总长	Overall length without bucket(mm)	1920	
F.带铲斗总长	Overall length with bucket(mm)	2200	
G.最大高度卸载角度	Dumping angle at maximum height (°)	39	
H.卸载高度	Dumping height(mm)	1520	
I.卸载距离	Dumping reach(mm)	545	
J.铲斗在地面的翻转角度	Rollback of bucket on ground (°)	30	
K.铲斗在最高时翻转角度	Rollback of bucket at ful height (°)	100	
L.轴距	Wheelbase(mm)	——	
M.离地间隙	Ground clearance (mm)	180	
N.离去角	Angle of departure (°)	26	
0.不带附件时前转弯半径	Turning radius front without bucket(mm)	800	
P.前转弯半径	Front tuning radius(mm)	——	
Q.后转弯半径	Rear tuning radius (mm)	——	
R.轮距(履带)	Tread width,center line to center line(mm)	——	
S.车宽(履带)	Width between outside of two wheels(m)	960	
T.带标准铲斗宽度	Bucket width(mm)	1040	

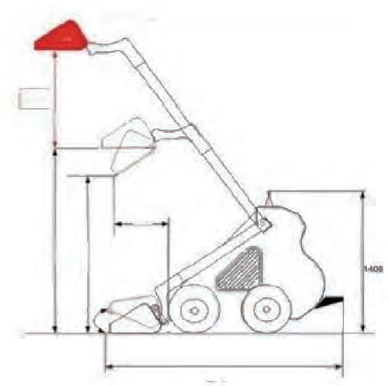

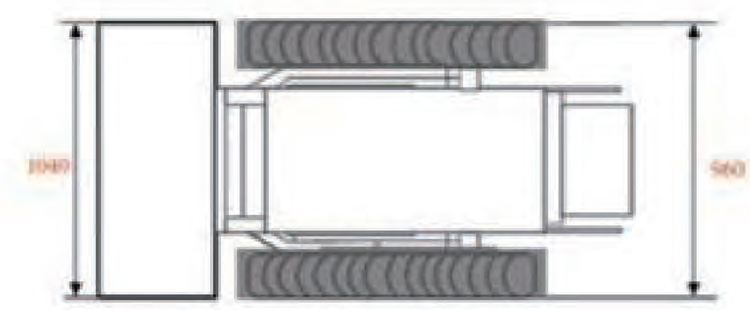

- 传动系统:动力性能卓越，长轴距设计(2300mm)免维护链轮箱，适应各种超重载工况，稳定性无与伦比。
  Drivetrain system: excellent power performance; Maintenance-free sprocket box designed with long wheelbase (2,300mm) and adapted to various ultra-heavy-duty operating conditions, featuring incomparable stability.
- 关键零部件采用国际一流品牌，支持起重臂起升、调平作业，以及连杆机构无级调速、智能控制。
  Key components from world-class brands, supporting boom lifting and leveling operations, as well as stepless speed regulation and intelligent control of coupled tools.
- 驾驶室可大角度翻倒，后部和上部机罩可旋转打开。可快速拆卸的侧板和脚部隔间使车辆部件的维修和保养变得方便。所有电气元件(电池保险丝和开关)、过滤器和排气口都很容易接近。
  The cab can be tipped over at a large angle, and the rear and upper hoods can be rotated to open. The quickly-detachable side panels and foot compartment enable convenient repair and maintenance of vehicle components. All electrical components (battery fuses and switches),filter and oil drain port are easily accessible.
- 超大豪华驾驶室，C型一体式外观，空间宽敞，视野开阔;空调性能优异，内部风道优化，流场均衡，温控稳定，配置八个出风口，支持玻璃除霜、暖脚功能。
  The super-large luxurious cab is integrated with C-type appearance, featuring spacious room and wide field of view.The air conditioner features excellent performance due to optimized internal air duct, balanced flow field and stable temperature control, and is configured with eight air outlets and supports glass defrosting and foot warming functions.
- 发动机监测报警:监测冷却液温度、发动机油压、液压油温度等，当测量数据超过设定值时，发出报警并显示故障代码。过载保护:当发动机长时间超载时，能够限制发动机的输出扭矩和转速，以防止过热损坏，减少磨损，避免进一步的故障。
  Engine monitoring and alarm;monitoring the coolant temperature, engine oil pressure, hydraulic oil temperature, etc; producing an alarm and displaying the fault code in case the measured data exceeds the set value. Overload protection: able to limit the output torque and speed oithe engine in case of overload for a prolonged duration, in order to prevent overheating and damage, minimize wear and avoid further failures.

技术规格 SPECIFICATIONS

项目 MODEL		YMT120	
工作重量	Operating weight (kg)	4000	工作性能 Performance
额定载荷	Rated load (kg)	1500	
铲斗容积	Bucket capacity (m^3)	0.55	
最大行驶速度	Max Speed (km/h)	12/18	
最大牵引力	Max traction (kN)	>32	
动臂崛起力	Max breakout (kN)	⩾22	
铲斗崛起力	Lifting time of boom(s)	7	
制造商	Manufacturer	潍柴	发动机 Engine
型号	Model	WP4.1	
额定功率	Rated power (kW/rpm)	103/2300	
排量	Engine displacement (L)	4.088	
排放标准	Emission Standard	国三	
A.最大操作高度	Overall operating height (mm)	4290	尺寸 Dimension
B.铲斗销高度	Height to bucket hinge pin (mm)	3278	
C.驾驶室顶高度	Height to top of cab (mm)	2160	
D.铲斗至其底部的最大高度	Height to bottom of level bucket (mm)	2983	
E.不带铲斗总长	Without bucket length(mm)	3023	
F.带铲斗总长	Overall length with bucket (mm)	3795	
G.最大高度卸载角度	Dumping angle at maximum height (°)	40	
H.卸料高度	Dumping height(mm)	2500	
I.卸载距离	Dumping reach(mm)	700	
J.铲斗在地面的翻转角度	Rollback of bucket on ground (°)	30	
K.铲斗在最高时翻转角度	Rollback of bucket at ful height (°)	104	
L.轴距	Wheelbase(mm)	1185	
M.离地间隙	Ground clearance (mm)	205	
N.离去角	Angle of departure (°)	20	
0.不带铲斗时转弯半径	Front turning radius without bucket (mm)	1278	
P.前转弯半径	Front tuning radius(mm)	2144	
Q.后转弯半径	Rear tuning radius (mm)	1857	
R.尾部长度	Rear axle to bumper (mm)	1082	
S.轮距(标准轮胎)	Tread width (mm)	1500	
T.车宽(标准轮胎)	Width (mm)	1880	
U.带标准铲斗宽度	Bucket width (mm)	1880	

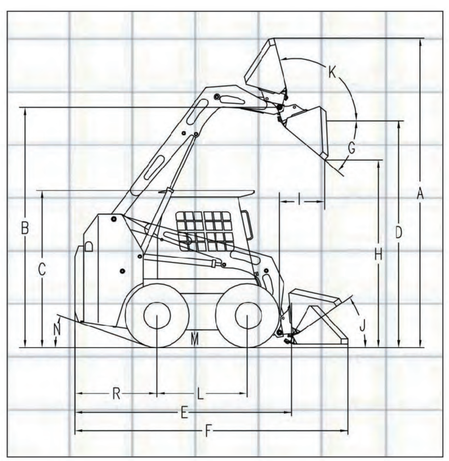

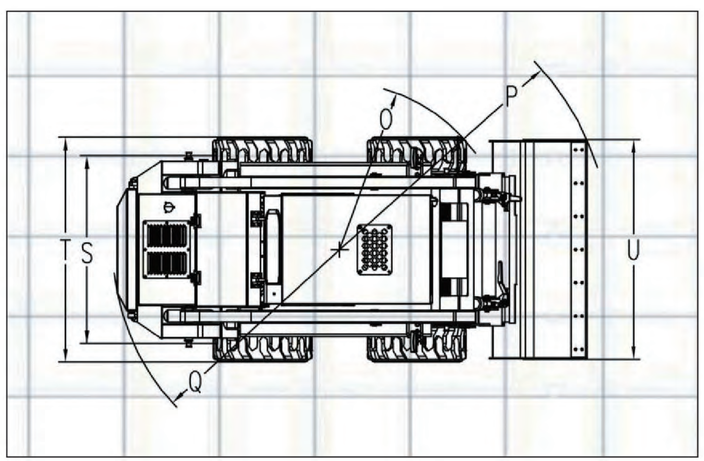

意美特®

挖掘装载机

BACKHOE LOADER

YMT895

- **有多种发动机品牌可供选择**
  A variety of engine brands are available
  多种发动机品牌可供您选择，包括但不限于玉柴、潍柴、康明斯等知名品牌。
  There are various engine brands for you to choose from, including but not limited to Yuchai, Weichai, Cummins and other well-known brands.

- **节省燃料**
  Save fuel
  变速箱设计先进，使用过程中可节省高达20%的燃油，并有效延长发动机的使用寿命。
  The gearbox has advanced design, which can save up to 20% of fuel during use and effectively extend the service life of the engine.

- **驱动桥支持个性化定制**
  The drive axle supports personalized customization
  拥有意大利卡拉罗、北联、云宇等多种国内外知名品牌，满足您的不同需求。
  A variety of well-known domestic and foreign brands are available, such as Italy Carraro, Beian, Yunnei, etc. to meet your different needs.

- **有两种选择:A型支撑腿和H型支撑腿**
  Two options are available: A-type support legs and H-type support legs
  A型支腿轻便灵活，操作方便;H型支腿承载能力更强，适用于更为复杂的工况。挖掘臂可在滑架上自由滑动，进一步扩大挖掘范围。
  The A-type support legs are light and flexible, easy to operate. The H-type support legs have stronger load-bearing capacity and are suitable for more complex working conditions. The digging arm can slide freely on the sliding frame to further expand the excavation range.

- **配备 ROPS/FOPS 驾驶室**
  Equipped with ROPS/FOPS cab
  防止翻车和落物损坏，确保您操作过程中的安全。
  Prevent rollover and falling object damage and ensure your safety during operation.

- **采用双向驾驶设计**
  Adopting a two-way driving design
  驾驶室豪华舒适，为您提供更加愉悦的工作体验。
  The cab is luxurious and comfortable, providing you with a more pleasant working experience.

- **四轮驱动系统**
  Four-wheel drive system
  四轮驱动系统提供出色的牵引力和稳定性，适应各种复杂地形，降低打滑和失控风险，提高操控性能，确保驾驶员安全。
  The four-wheel drive system provides excellent traction and stability, adapts to various complex terrains, reduces the risk of skidding and loss of control, improves handling performance, and ensures driver safety.

- **多种属具可供选择**
  There are many types of attachments
  包括破碎锤、螺旋钻、旋转木抓叉、托盘叉、快换装置、四合一铲斗、六合一铲斗等，满足您在不同工况下的需求。
  Including breaker hammers, auger drills, rotary wood grab forks, pallet forks, quick change devices, four-in-one buckets, six-in-one buckets, etc., to meet your needs under different working conditions.

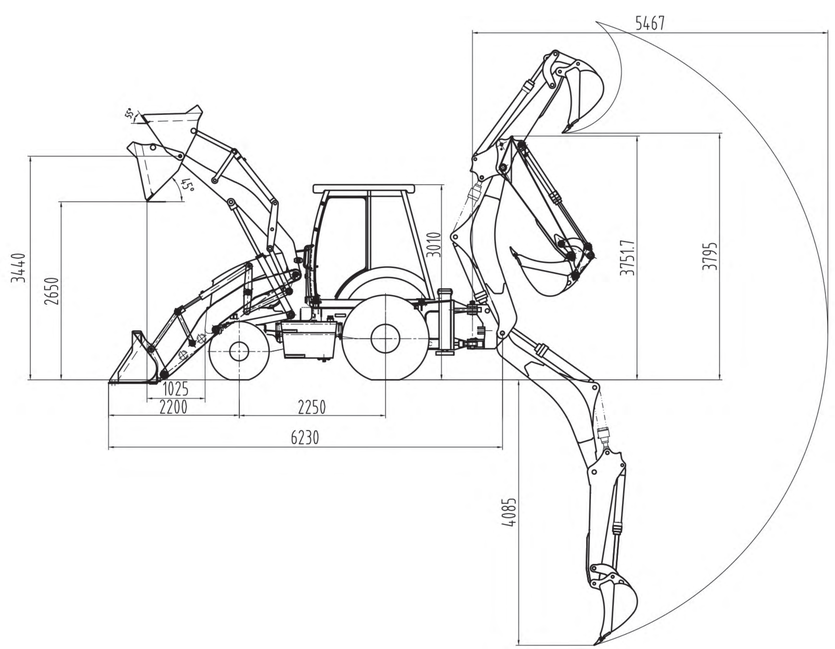

项目 MODEL		YMT895	
装载斗容	Load bucket capacity	1.0m³	Performance
崛起力	Load breakout force	47KN	
装载举升能力	Load lifting capacity	2500KG	
挖斗卸载高度	Bucket unloading height	2830mm	
铲斗卸载距离	Bucket unloading distance	924mm	
铲挖深度	Digging depth	30mm	
反铲斗容	Backhoe bucket capacity	0.3m³	
挖斗崛起力	Backhoe digging force	49.8KN	
挖掘回转角	Backhoe swing angle	180°	
挖斗卸载高度	Bucket unloading height	3795mm	
最大挖掘深度	Max.digging depth	4085mm	
最大牵引力	Max.traction force	77KN	
形式	Model	液压转向 hydraulic steering	Steering System
转向器型号	Steering gear model	BZZ-250	
工作泵排量	Pump displacement	63ml/r	
工作泵型号	Pump model	CBG2063	
转向角	Steering angle	±39°	
最小转弯半径	Min.turning radius	6581mm	
变速箱	Gearbox	定轴式动力换挡 Countershaft Powershif	Drivetrain
型号	Model	TLB1-4WD	
档位数	Gears	4F, 4R	
液力变矩器	Hydraulic torque converter	卡拉罗 Carraro	
进口压力	Inlet pressure	-	
出口压力	Outlet pressure	1.3-1.55Mpa	
冷却方式	Cooling mode	油冷压力循环 Oil-cooling pressure circulation	
流量	Flow rate	-	
装载液压系统	Loading hydraulic system	20Mpa	System Pressure
挖掘液压系统	Excavation hydraulic system	20Mpa	
转向液压系统	Steering hydraulic system	14Mpa	
型号	model	26.22-1920/28.43M-1654	Drive Axle
生产厂家	Manufacturer	意大利卡拉罗 Italy carraro	
额定前桥载荷	Rated front axle load	22.5T	
额定后桥载荷	Rated rear axle load	18.75T	
整机重量	Operating weight	8950KG	Overall Dimension
整机外形尺寸	Overall dimension	6050x2484x3453mm	
轴距	Wheel base	2280mm	
轮距	Wheel tread	1785mm	
最小离地间隙	Ground clearance	300mm	
型号	Model	Weichai WP4G95E221	Engine
类型	Type	直列、直喷、水冷、涡轮增压、四冲程 Inline,direct injection,water-cooled,turbocharged,four-stroke	
气缸数-内径×行程	Cylinders -Inner diameter x stroke	4-105×130	
额定功率	Rated power	70KW	
额定转速	Rated speed	2200r/min	
最低燃油率	Min.fuel consumption	219.4g/kw.h	
最大扭矩	Max.torque	380N.m	
排量	Displacement	4.5L	
行车制动	Traveling brake	湿式桥、内置式、自调节、自平衡 Wet internal self- regulatic self-balance type	Braking System
驻车制动	Parking brake	手动制动 Manual brake	
前后规格	Front/Rear model	14-17.5/19.5L-24	Tire
前轮气压	Front tyre pressure	0.4Mpa	
后轮气压	Rear tyre pressure	0.35Mpa	
最高车速	Max.travel speed	38Km/h	

意美特®

轮式装载机

WHEEL LOADER

YMT915

产品特点 Product characteristics

1、YMT装载机适用于公路建设，城市建设，环境卫生，煤和砂砾料场，中小型土建工程，车站，码头，仓库和货场，主要用于负荷转移的疏松土壤,沙子和石头，煤渣，垃圾和其他类型的松散物质。
2、采用成熟经典的传动部件，定轴箱与发动机实现最佳匹配，节能高效。
3、2600mm 轴距，机动灵活，场地适应能力强。
1、The YMT loader is suitable for road construction, urban construction, environmental sanitation, coal and gravel yards, small and medium-sized civil works, stations, docks, warehouses and freight yards, mainly used for loading and transferring loose soil, sand, stone cinder, garbage and other types of loose materials.
2、The use of mature classic transmission components, fixed axle box and engine to achieve the best match, energy saving and high efficiency.
3、2600mm wheelbase, flexible, strong adaptability to the site.

产品细节 Product details

参数配置			
项 目	Item	参数 Specifications	单位 Unit
铲斗容量	Bucket Capacity	0.7	m^3
额定载重	Rated Loading	1500	kg
三项和时间	Total Cycling Time	≤ 9	S
最高车速	Max.Speed	17	km/h
最大崛起力	Max.Breakout Force	36	KN
最大牵引力	Max.Traction Force	20	KN
最小转弯半径	Minimum Turning Radius	4900	mm
车长	Length	5270	mm
车宽	Width	1850	mm
斗宽	Bucket Width	1840	mm
车高	Height	2710	mm
轮距	Tread	1500	mm
轴距	Wheel Base	2100	mm
最小离地间隙	Min Ground Height	260	mm
最大卸载高度	Max.Dumping Height	2500	mm
对应卸载距离	Max.Dumping Distance	950	mm
整机工作质量	Operation Mass	3500	kg

意美特®

轮式装载机

WHEEL LOADER

YMT920

高效率 操作简单 安全保障 运行稳定

产品特点 Product characteristics

YMT装载机是新一代多工况复合型小型装载机,其可广泛适用于建筑工地、矿山开采、井下装卸、市政建设、园林、农村或城镇建设等场合,可以铲装和短途装运松土、沙石、煤炭、垃圾等松散物料,还可以进行牵引、平地、堆积等作业,是一种多用途、高效率的工程机械。备T3 阶段全新发动机。动力强劲，可靠性高，控制精确,燃烧充分,动力储备大,燃油消耗率小,综合节能节能 5% 以上。
YMT loader is a new generation of multi-condition compound small loader, which can be widely used in construction sites, mining underground loading and unloading, municipal construction, gardens, rural or urban construction and other occasions, can shovel and short-distance loading and loading of loose materials such as loose soil, sand, coal, garbage, but also can carry out traction, flat stacking and other operations, is a multi-purpose, high-efficiency workers Cheng Machinery. New engine for T3 stage. Strong powerhigh reliability, accurate control, full combustion, large power reserve, small fuel consumption rate, comprehensive energy savingmore than 5%.

产品细节 Product details

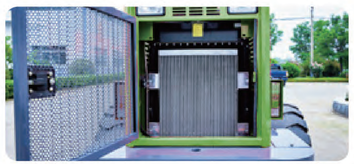

参数配置			
项 目	Item	参数 Specifcations	单位 Unit
铲斗容量	Bucket Capacity	1	m^3
额定载重	Rated Loading	2000	kg
三项和时间	Total Cycling Time	≤ 10	s
最高车速	Max.Speed	24	km/h
最大崛起力	Max.Breakout Force	60	KN
最大牵引力	Max.Traction Force	50	KN
最小转弯半径	Minimum Turning Radius	5070	mm
车长	Length	5870	mm
车宽	Width	1940	mm
斗宽	Bucket Width	2020	mm
车高	Height	2830	mm
轮距	Tread	1500	mm
轴距	Wheel Base	2335	mm
最小离地间隙	Min Ground Height	250	mm
最大卸载高度	Max.Dumping Height	2800	mm
对应卸载距离	Max.Dumping Distance	1050	mm
整机工作质量	Operation Mass	5700	kg